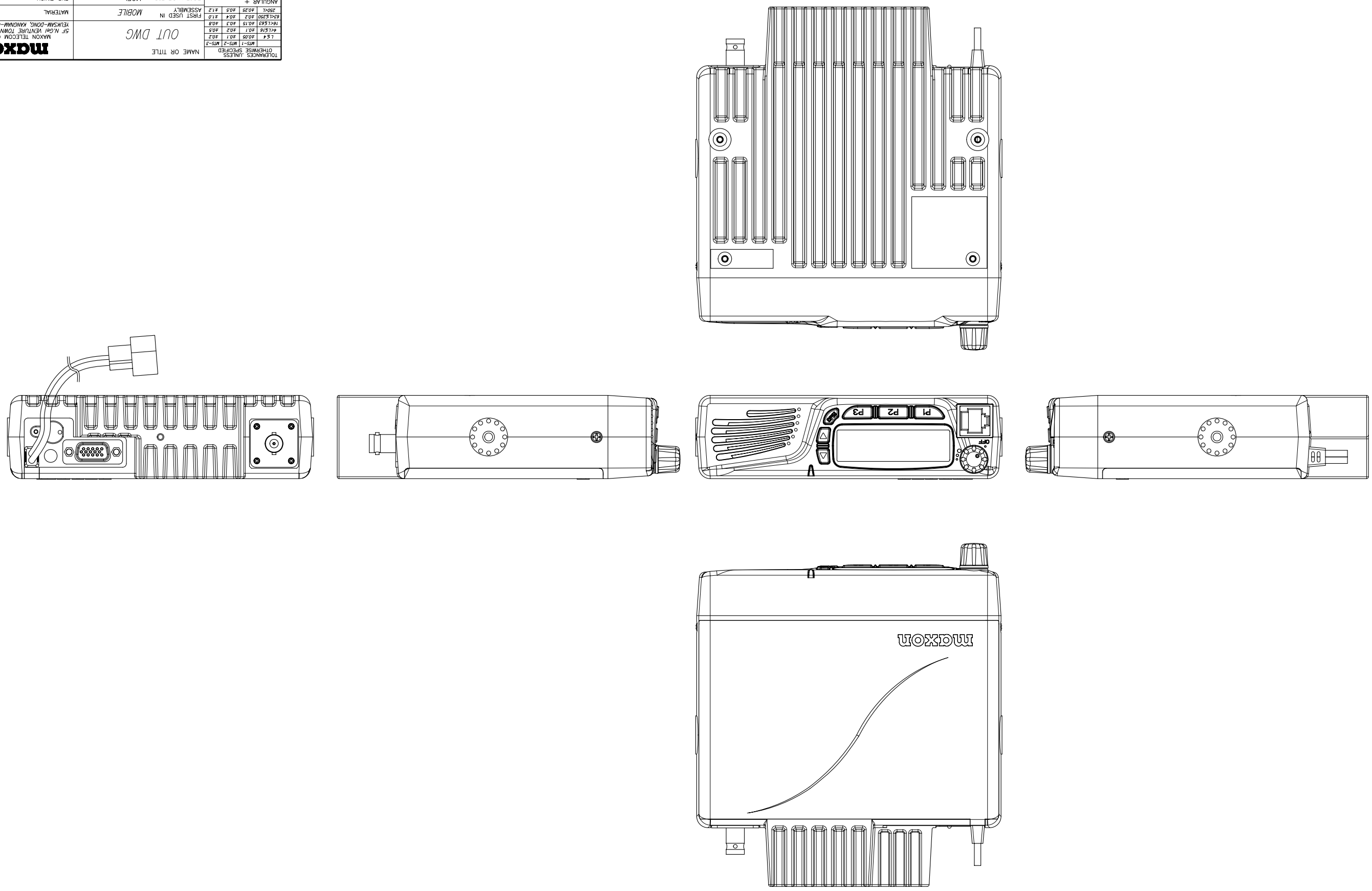

TOLERANCES UNLESS OTHERWISE SPECIFIED	MTS-1	MTS-2	MTS-3	NAME OR TITLE			
L≤4	±0.05	±0.1	±0.2	OUT DWG			
4<L≤16	±0.1	±0.2	±0.5				
16<L≤63	±0.15	±0.3	±0.8	FIRST USED IN ASSEMBLY	MOBILE		
63<L≤250	±0.2	±0.4	±1.0				
250<L	±0.25	±0.5	±1.2				
ANGULAR ±				FIRST MADE FOR	MCEL	END FINISH	
				CONTRACT OR CUSTOMER NO	PM-200	DO NOT SCALE DRAWING	DIMENSIONS ARE IN MM INCH
						SCALE	DRAWING PART NO.	REV
DRAWN	CHECKED	CHECKED	APPROVED			1/1	000-000	00
2006.10								

MAXON FORM A1 (594mm x 841mm)

REVISIONS								
MODEL NO.	PART NO.	REV NO.	SYM	CONTENTS	ECO NO.	DRAWN	CHECKED	CHECKED	APPROVED